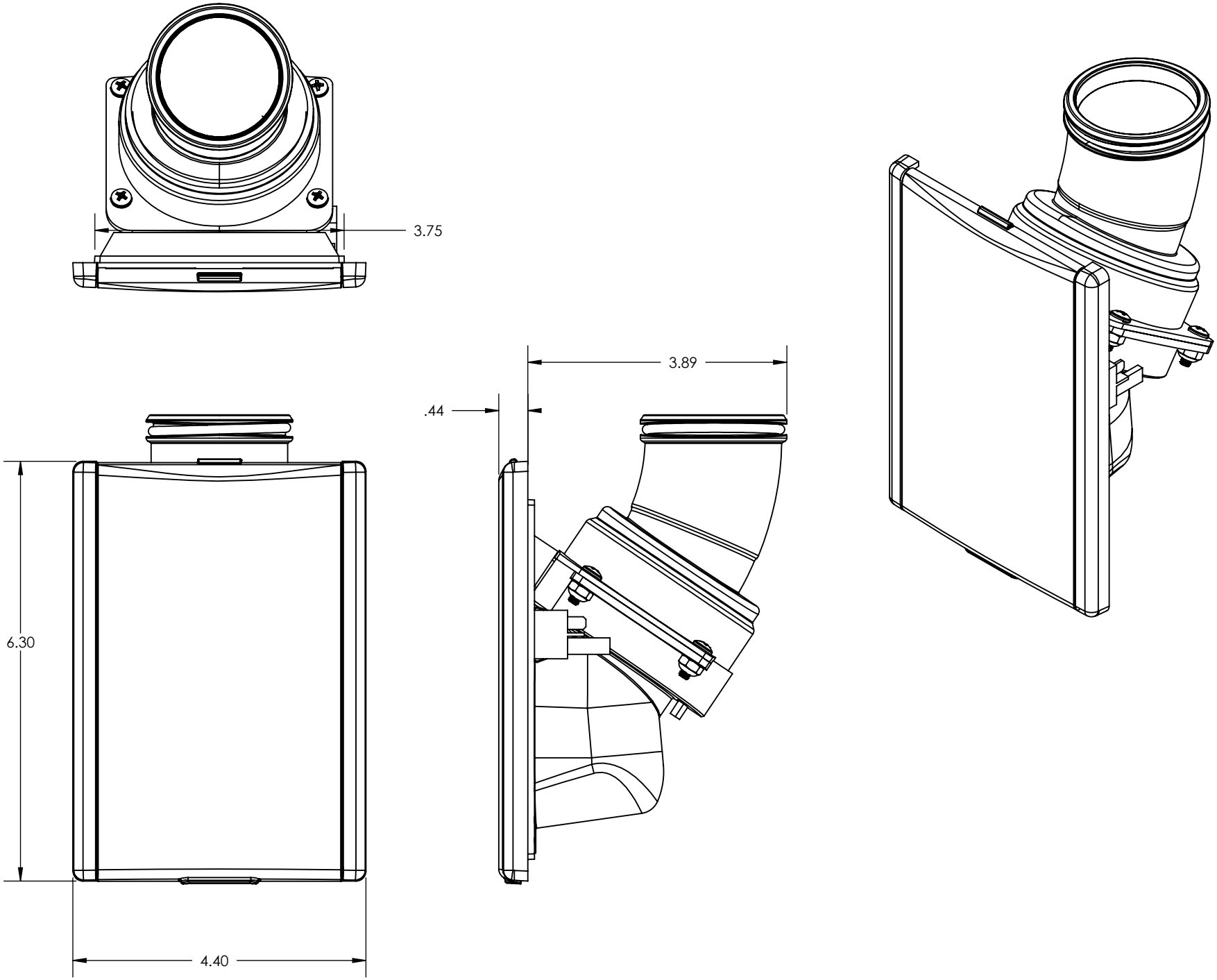
3.75
3.89
.44
6.30
4.40

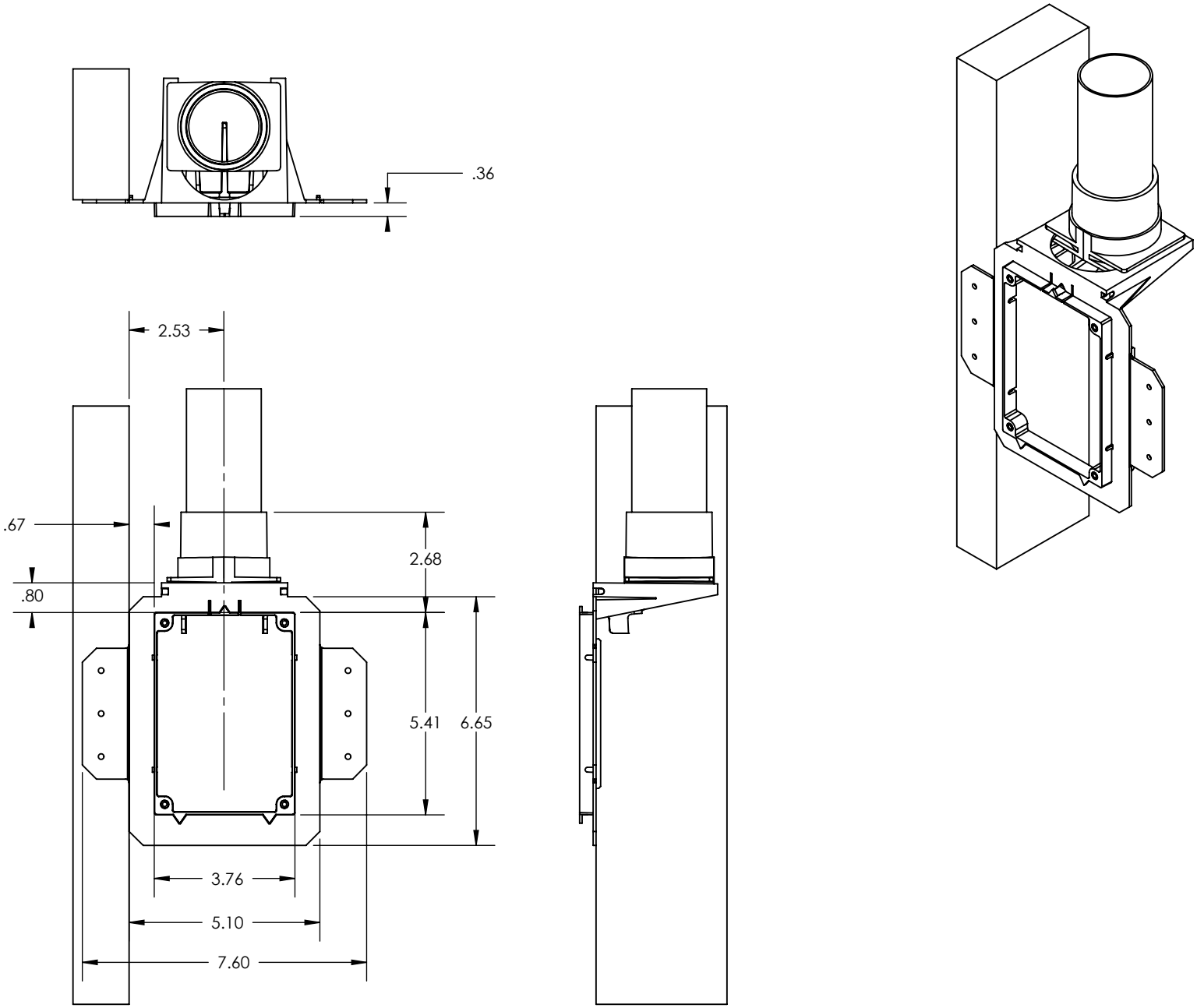
.36
2.53
.67
.80
2.68
5.41
6.65
3.76
5.10
7.60